Ontogeny of a Salt Marsh Estuary

Alfred C. Redfield

Science, New Series, Vol. 147, No. 3653 (Jan. 1, 1965), 50-55.

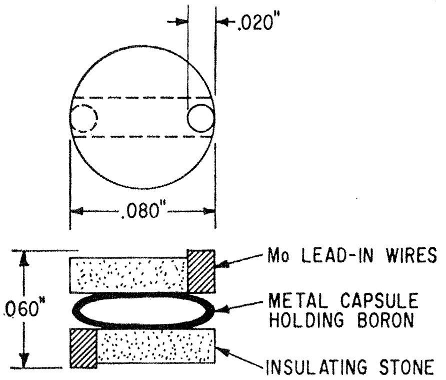

Fig. 1. High pressure, high temperature reaction cell.

and moderate temperatures (1500° to 2000°C) for intervals of a few minutes, cooling the specimen to 25°C, and then reducing the pressure to 1 atm.

This new form of boron was prepared in an apparatus similar to that described by Bundy (*4*). The boron was confined in a tube (Fig. 1) and heated by passing a current through the tube (made of Ti or Ta) by way of molybdenum wires at each end. Usually the boron was placed against the tube wall; in a few experiments the boron particles were insulated from the tube by a liner made of MgO or they were mixed with MgO or silicon powder. Pressures were estimated by reference to transitions in bismuth at 88 kb, barium at 59 and 140 kb, iron at 131 kb, and lead at 160 kb. The temperatures were estimated from the electric power dissipated in the sample; the error may be as much as 10 percent owing to uncertainties in calibration and gradients in temperature.

Table 1. DeBye-Scherrer d-values for the boron prepared as described in this paper.

Å	Relative intensity*
4.4	m
4.1	m
3.75	ms
3.50	m
2.51–2.54	s
2.30–2.32	s
2.15	w
2.10	w
2.00	w
1.98	w
1.68	w
1.60	w
1.50	mw
1.48	mw
1.45	m
1.41	ms
1.39	m
1.38	m
1.35	m
1.30	m
1.27	w

* m, medium; s, strong; w, weak.

The product was a dark, pitchlike solid which was deep red in thin sections; its density ranged between 2.46 and 2.52 g/cm^3 as measured by the sink-float technique. Its electrical resistivity was estimated to be about 10^6 ohm-cm at 25°C, and its resistance fell by about a factor of 3 on heating to about 100°C. Both n- and p-type semiconducting specimens were obtained as determined by measurements of thermoelectric power. (The zone-refined, β-rhombohedral boron starting material had a slightly higher resistivity but about the same relative change of resistance with temperature.)

DeBye-Scherrer x-ray diffraction patterns of various preparations showed some weak lines corresponding to some of the known forms of boron, together with a strong pattern which could not be attributed to any combination of the known forms of boron. The d-spacing values of the main lines in typical patterns of the new form are given in Table 1. When coarsely crystalline rhombohedral boron was used as starting material, the diffraction spots of these crystals could be distinguished from the smooth lines of the new form.

It is not known whether the product is a single crystalline phase or a mixture of new and previously known forms of boron. Increasing the time of heating at high pressure from 6 to 60 minutes did not produce any markedly different product; neither did pressures higher than about 100 kb. Temperatures higher than about 2000°C caused the boron to react with its Ti or Ta container. It is possible that the boron exists in one crystalline phase at high pressures but then reverts to the observed form as the pressure is reduced. However, during pressure release the sample did not show any marked resistance changes that would indicate a change in atomic arrangement of the boron.

What is taken to be a new phase of pure boron might possibly be a boron compound with titanium, tantalum, or silicon, for boron can incorporate small amounts of other elements in its lattice (*5*). However, this possibility does not seem likely in view of the following observations:

1) The same new features of the DeBye-Scherrer pattern are obtained whether the boron is confined in Ta, Ti, or MgO during preparation.

2) The new form is not observed at conditions of about 1800°C and about 80 kb; the product instead has a density less than 2.39 and shows only the rhombohedral β pattern reported by Amendola (*3*).

3) If a fragment of the dense form is buried in hexagonal boron nitride and heated to about 1500°C for about a minute at a pressure of 30 kb, the product has a density between 2.25 and 2.36 g/cm^3 and its DeBye-Scherrer pattern agrees well with that of the well-known rhombohedral form of boron (*3*).

4) The electrical resistivity of the dense form is almost as high as that of the purified boron starting material.

R. H. Wentorf, Jr.
General Electric Research Laboratory
Schenectady, New York

References and Notes

1. *Boron: Synthesis, Structure, and Properties*, Proceedings of a Conference on Boron. J. A. Kohn, W. F. Nye, G. K. Gaule, Eds. (Plenum Press, New York, 1960); J. L. Hoard and A. E. Newkirk, *J. Am. Chem. Soc.* **82**, 70 (1960); S. LaPlaca, A.S.T.M. DeBye-Scherrer Card No. 11-617.
2. B. F. Decker and J. S. Kasper, *Acta Cryst.* **12**, 503 (1959).
3. A. Amendola, A.S.T.M. DeBye-Scherrer Card No. 11-618; see also D. E. Sands and J. L. Hoard, *J. Am. Chem. Soc.* **79**, 5582 (1957).
4. F. P. Bundy, *J. Chem. Phys.* **38**, 631 (1963); *Science* **37**, 1057 (1962).
5. H. J. Becker, *Z. Anorg. Allgem. Chem.* **306**, 260 (1960).
6. I thank Mrs. D. K. DeCarlo for preparing many DeBye-Scherrer x-ray patterns.

4 October 1964

Ontogeny of a Salt Marsh Estuary

Abstract. *The development of a typical New England salt marsh, and the growth of the sand spit which shelters it, during the past 4000 years has been reconstructed from soundings and borings of the peat. The results have been interpreted with the aid of observations on the structure of the marsh and estimates of the rate of its vertical accretion based on carbon-14 determinations.*

"There is no other case in nature, save in the coral reefs, where the adjustment of organic relations to physical conditions is seen in such a beautiful way as the balance between the growing marshes and the tidal streams by which they are at once nourished and worn away" (*1*).

The existing peat of tidal marshes preserves a record of the conditions which existed when the peat was deposited. In this report I have attempted to reconstruct from this record the history of the development of a typical New England salt marsh and of the estuary which it occupies. The principal factors which interact to determine the development of the marsh appear to be the range of tide, the physiology of the plants which produce the peat in relation to tide levels, the process of sedimentation on open tidal flats and within the stands of plants, and the changing level of the sea relative to the land.

The basis for the interpretation of the conditions found in the peat was developed independently by Chapman (*2*) and myself (*3*) and grew out of an attempt to reconcile observations of Shaler (*1*), Mudge (*4*), and others. Shaler concluded that a barren slope would become vegetated near the high water level by a group of plants which can withstand limited submergence. In the New England marshes these include *Spartina patens*, a dwarf form of *S. alterniflora, Distichlis spicata*, and some others. The peat they produce will be referred to as high marsh peat. The intertidal slope would become covered with *S. alterniflora*, locally known as *thatch*, which grows down from the high water level through nearly two-thirds of the tidal range. The lower limit of *S. alterniflora* is quite definite and will be referred to as the thatch line. The accumulation of sediment within the stand of *S. alterniflora* builds up a layer of intertidal peat until the high water level is reached, when high marsh vegetation succeeds it and a layer of high marsh peat is formed covering the intertidal peat. Mudge (*4*) had pointed out that peat was found in the Lynn marshes at depths which greatly exceed those at which the salt marsh plants can grow and considered this to be evidence of subsidance—that is, a rise in sea level relative to the land. The effects of these processes on the structure of the peat were discussed by Johnson (*5*).

If the sea level rises subsequent to the initiation of the marsh, the bordering upland will become submerged and covered with a layer of high marsh peat. If at the same time sediment accumulates in the area beyond the thatch line at a rate as great as, or greater than, the rise in sea level, the intertidal marsh will grow out over the rising surface of the flat to such an extent that the thatch line retains its critical elevation relative to the rising high water level. Meanwhile, high marsh will extend over the intertidal peat as far as the intertidal marsh has built up to the high water level.

Accordingly, an ancient marsh should consist of high marsh peat increasing in depth from the upland to the site of the original high water line and should be underlain by the surface of the submerged upland. Beyond this point, the subsurface should consist of sedimentary deposits which slope upward away from the upland. These deposits should be covered by a layer of intertidal peat of a thickness equal to the critical depth of the thatch line. Over the intertidal peat, high marsh peat will occur as a wedge decreasing in thickness toward the outer margin of the marsh (see Fig. 1). This is an idealized picture which may be expected to apply only if sedimentation occurs at a rate as great or greater than the rise in sea level, and if the development is not interrupted by episodes of erosion and redeposition. Johnson (*5*) describes many cases in which the structure of salt marsh peat cannot be interpreted so simply.

Table 1. Exponents in the hydraulic geometry of tidal estuaries in Virginia and Massachusetts, after Langbein (*13*).

Exponent	Theoretical	Unnamed estuary, Va.	Wrecked Recorder Creek, Va.	Spring Creek, Barnstable, Mass.
Width, b	0.72	0.72	0.77	0.74
Depth, f	.23	.22	.23	.17
Velocity, m	.05	.06	.00	.09

This hypothesis has been applied to reconstructing the development of the salt marsh at Barnstable, Massachusetts. The estuary in which the marsh lies is bounded on the south by upland of the Sandwich moraine. It is protected to the north from Cape Cod Bay by a sand spit, Sandy Neck, 6 miles (9.6 km) in length, which appears to have grown eastward from an anchor point provided by an outlying moraine, Scorton Neck (see Figs. 2 and 3*F*). About half the enclosed area is occupied by salt marsh, of which nine-tenths has developed to the high marsh condition. The open areas are occupied by sand flats drained by shallow channels at low tide (*6*). Evidence of former exposure of the upland shore to the open sea is provided by a prominent sea-cut cliff at Calves Pasture Point (*7*) and by a similar cliff on the eastern end of Scorton Neck inside the base of Sandy Neck. The latter descends 18 feet (5.5 m) below the marsh surface, reflecting the rise in sea level since it was originally cut. A series of sand hills submerged in the marsh along the western part of the sand spit also provide evidence of rising sea level (Fig. 3, *A* and *B*), as do submerged deposits of freshwater peat and tree stumps in several places.

The entire marsh was sounded with a rod in sufficient detail to establish the major topography of the substratum on which it rests. Supplementary information was obtained by coring. A contour map constructed from the soundings (Fig. 2) shows the following features.

1) Along the south side of Sandy Neck the depth of peat decreases progressively eastward, indicating the more recent development of the marsh as the sand spit grew. Five shallow tongues, which are attributed to terminal hooks which marked temporary interruptions of the growth of the spit, extend across the marsh along the eastern part.

2) Along the upland margin of the marsh, the depth contours suggest a relief similar to that of the adjacent upland. The depths increase to a series of basins of maximum depth not far from the margin. The soundings usually encountered soft peat at all depths to a subsurface containing gravel, stones, or a hard bottom. Deeper basins are also found along the western part of the marsh bordering Sandy Neck.

3) In the central part of the marsh the relief is relatively low. The depths of peat decrease toward the larger creeks which occupy broad areas with depths less than 12 feet. The peat usually becomes more compact within 5 or 6 feet of the substratum, indicating intertidal peat of high mineral content. The substratum is usually sandy.

The block diagram (Fig. 4) shows the morphology more clearly. The deep trough along the margins and the thinning of the peat toward the major creeks and open water, and in the easterly direction, are seen in the vertical sections. Block *A* shows a vertical section at the head of the marsh, where the peat was formed by the flooding of an upland valley which had not been previously invaded by marine sediments.

These general features are in accordance with the expectations raised by the hypothesis. As a further test a series of cores was collected across the marsh from the upland to one of the major creeks, so that the relation of high marsh peat, intertidal peat, and composition of the substratum could be examined. The water content provides an objective criterion of the character of the deposits, it being found that high marsh peat contains more

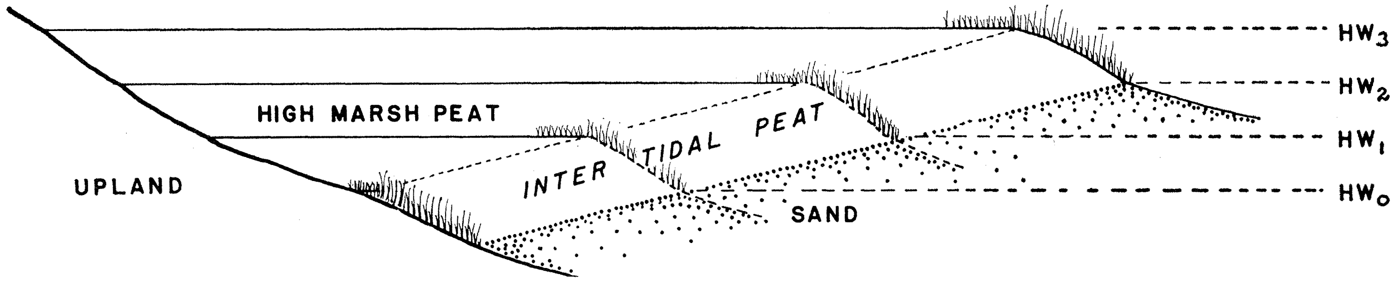

Fig. 1. Development of a marsh of the type found in New England, with rising sea level and continued sedimentation.

than 60 percent (usually more than 70 percent), intertidal peat between 60 and 30 percent, and the unvegetated substratum less than 30 percent water. Figure 5 shows the water content of the series of cores. Its distribution confirms the expected structure.

The extent of the marsh as it existed in the past has been reconstructed from the contour map of depths of peat (Fig. 2) by applying the following rules. (i) The time at which mean high water reached any given elevation as sea level rose was established by Redfield and Rubin (*8*) by carbon-14 dating of samples of peat collected at various depths at positions where the upland was covered by high marsh peat. They concluded that the mean high water level has risen, relative to the land, at an average rate of 3.3×10^{-3} feet per year during the last 2100 years. Prior to that time the average rate of rise was 10×10^{-3} feet per year extending back for at least 3700 years. (ii) The position of the inner margin of the marsh, where it met the upland or the sand spit, is given by the depth contour corresponding to the time in question. (iii) The position of the outer margin of the marsh where it met bare flats is given by the depth contour which exceeded that of the inner margin by the critical depth of the *thatch line*. This depth was determined to be approximately 6 feet by measuring the elevation of a sand flat on which a vegetation of *S. alterniflora* became established while under observation, controlled by tide gage measurements which fixed the local elevation of mean high water. (iv) The position of the outer limit of high marsh is given by the depth contour 9 feet below the level of the high marsh at the time in question. This somewhat arbitrary rule was based on the observation that the depth of high marsh along its present outer margin is usually not less than this.

The reconstructions shown in Fig. 3 are thus based on objective interpretation of observed data. However, no criteria have been found for determining the extent of the sand spit beyond the positions where marsh peat occurred, other than the present condition. In this respect the reconstructions of the extent of the spit are based on subjective judgment, as are also the diagrams in a few places where the application of the rules was ambiguous.

The Sandwich moraine was deposited at the termination of the last advance of the Wisconsin glaciation (*9*). The earliest local organic remains which have been dated are freshwater deposits from a kettle hole at Falmouth, Massachusetts, which are about 9750 years old (*10*). The earliest undoubted saltwater peat recovered from the Barnstable marsh was found at a depth of 23 feet below the present mean high water level and was about 3660 years old. Many of the deeper basins along the margin of the upland were sounded to 25 or 30 feet, and it is not unlikely that they contained peat as old as 4000 years or more. A sample collected near Scorton Neck at the base of Sandy Neck from 16 feet below the present marsh surface was 3170 years old, indicating that the sand spit had developed prior to that time. The development of the features to be traced took place very recently —probably not more than 4000 years ago.

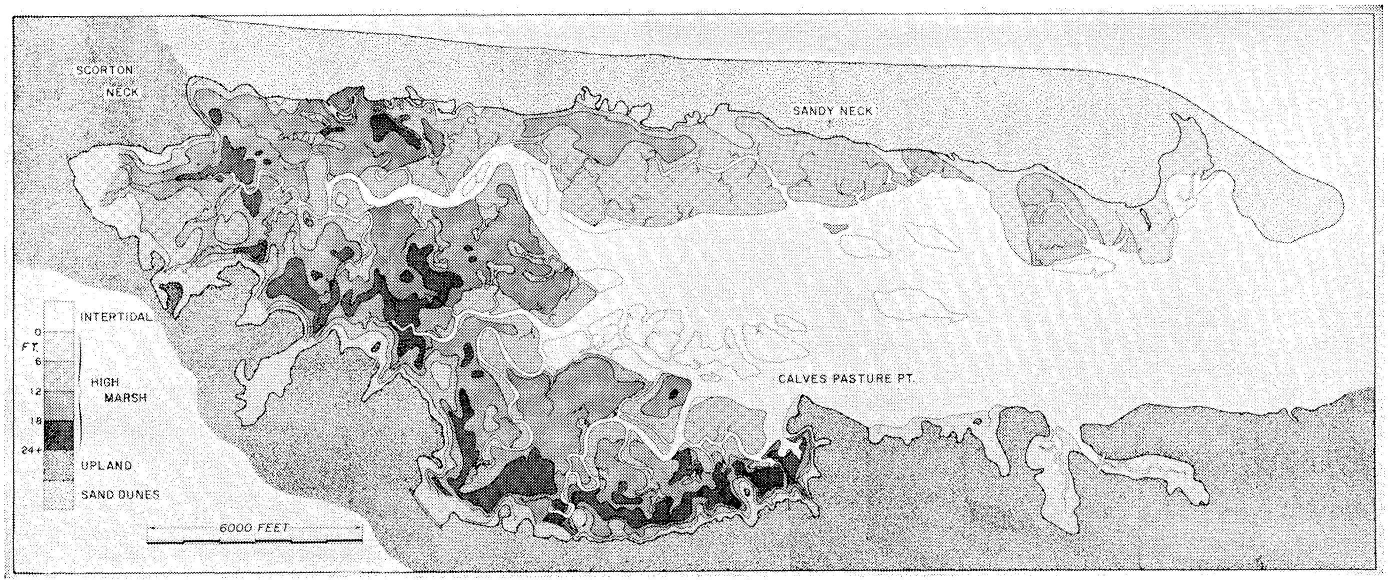

Fig. 2. The Barnstable estuary, showing distribution of depth of peat in the high marsh. Contour interval, 6 feet (1.8 m).

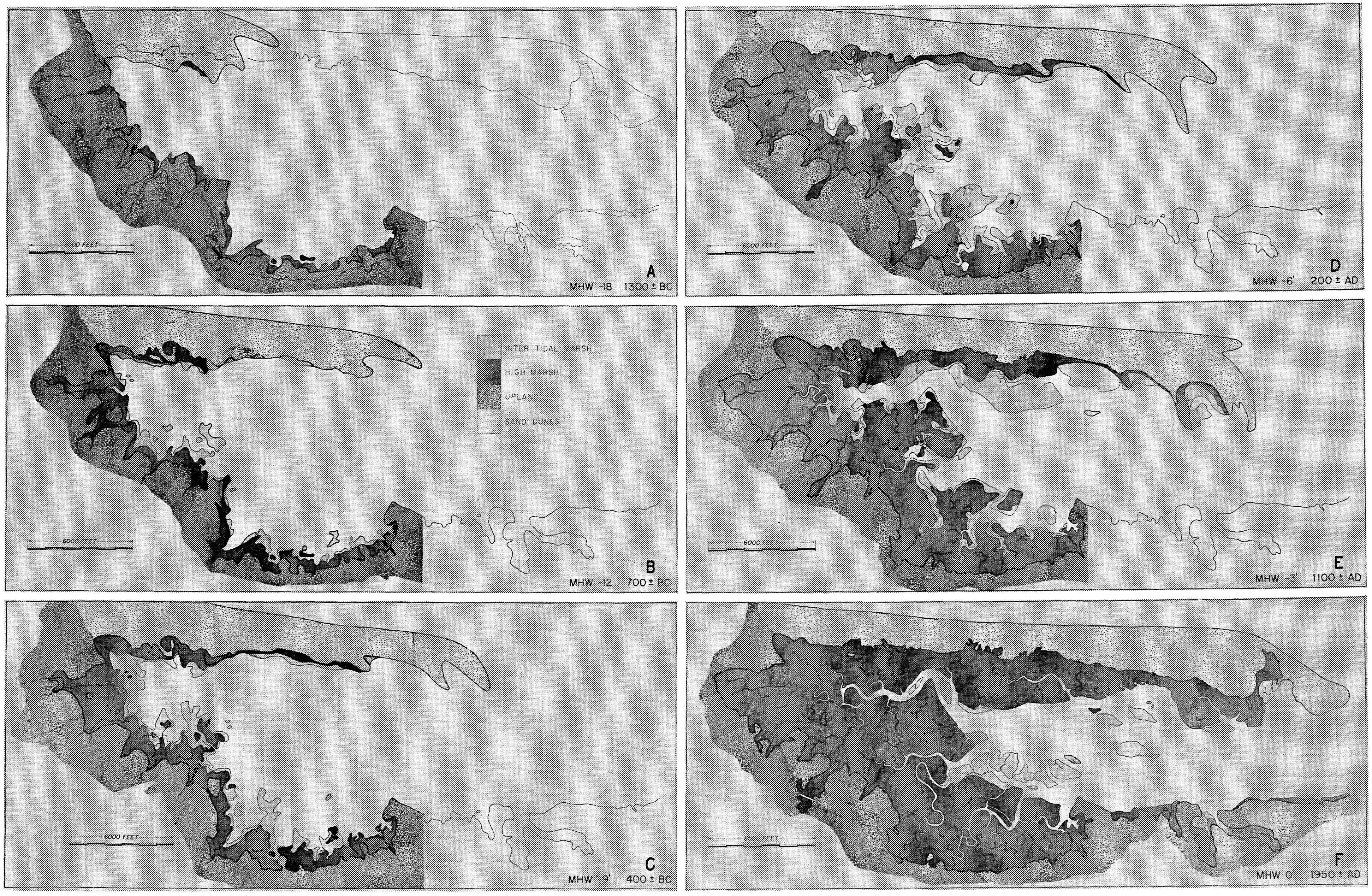

Fig. 3. Reconstruction of Barnstable estuary and marsh. The date and mean high water (MHW) in feet below the present level are indicated in the bottom right-hand corner of each reconstruction.

The earliest state which has been reconstructed is that of 1300 B.C., when sea level was 18 feet below its present elevation (see Fig. 3*A*). The sand spit was then little more than a mile in length. Its inner margin lay some 1000 feet south of its present position. The intervening area has been flooded subsequently by rising sea level, leaving the sand hills within it as islands surrounded by marsh or completely buried in marsh peat. The subsequent reconstructions show that the sand spit has grown progressively to the east, but at a rate that appears to have diminished since about 2000 years ago. It is suggestive that at about that time the rate of rise of sea level decreased greatly. The terminal hooks, which are found buried in the peat at present, appear to have developed during this latter period of slowly rising sea level (see Fig. 3, *D* and *E*). The margin of the marsh along the western half of Sandy Neck is very irregular as a result of the flooding of sand hill topography by rising sea and marsh level. Along the eastern half the margin is much smoother, because the hooks have been covered by peat and wind-blown sand has accumulated so rapidly that the marsh has not encroached on the sand hill topography.

The marsh itself at the earliest stage consisted of isolated pockets of peat occupying indentations in the upland. They resemble the discontinuous area of marsh found at present along the shore of the open harbor east of Calves Pasture Point (see Fig. 2). Such areas appear to be eroding at the outer face and to be advancing over the upland as sea level rises. Presumably similar pockets may have existed along the upland for an indefinite period prior to the earliest reconstruction. Figure 3*B* shows that with the extension of the sand spit and the accumulation of sediment in the protected basin, the marginal marsh has become continuous and is extending as intertidal marsh into the enclosure. At the same time it is invading the upland, particularly the more pronounced valleys and the areas of low relief to westward.

The subsequent reconstructions (Fig. 3, *C* and *E*) show the marsh growing out into the basin as tongues whose

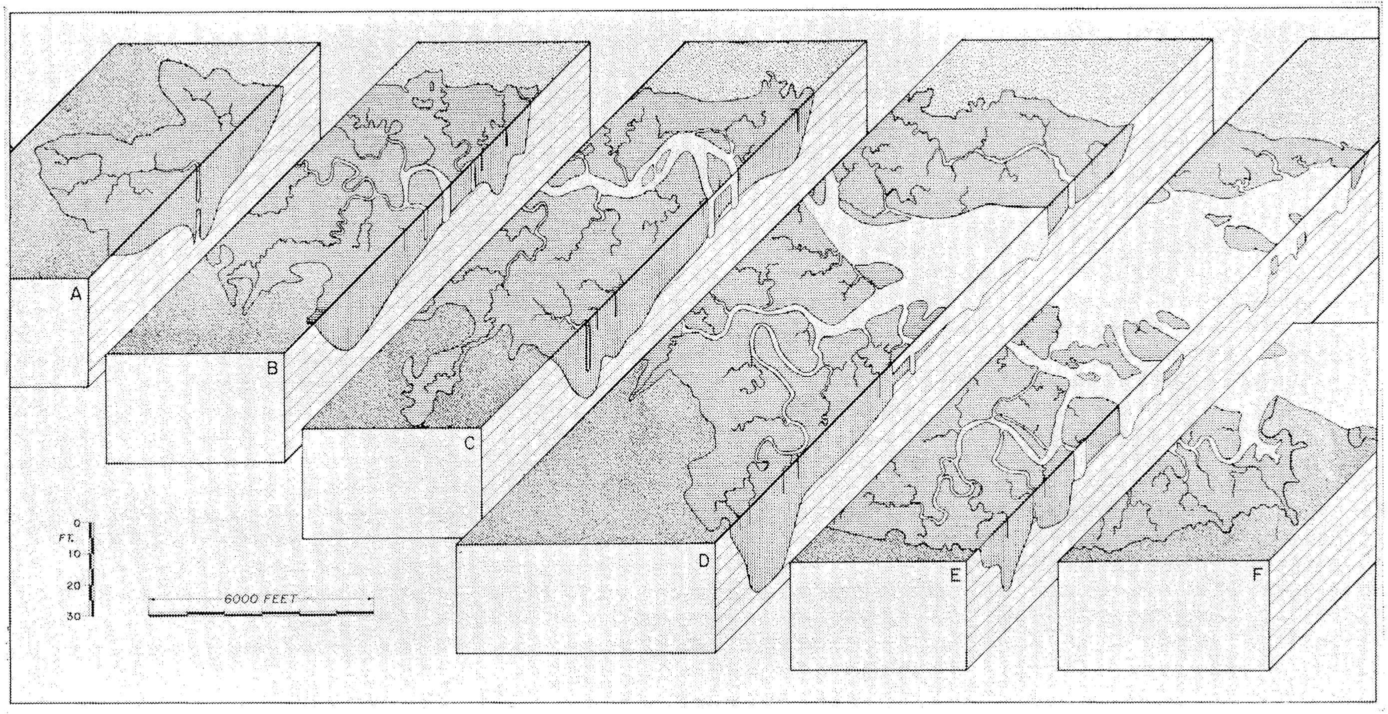

Fig. 4. Block diagram showing depth of peat along sections across the marsh at Barnstable.

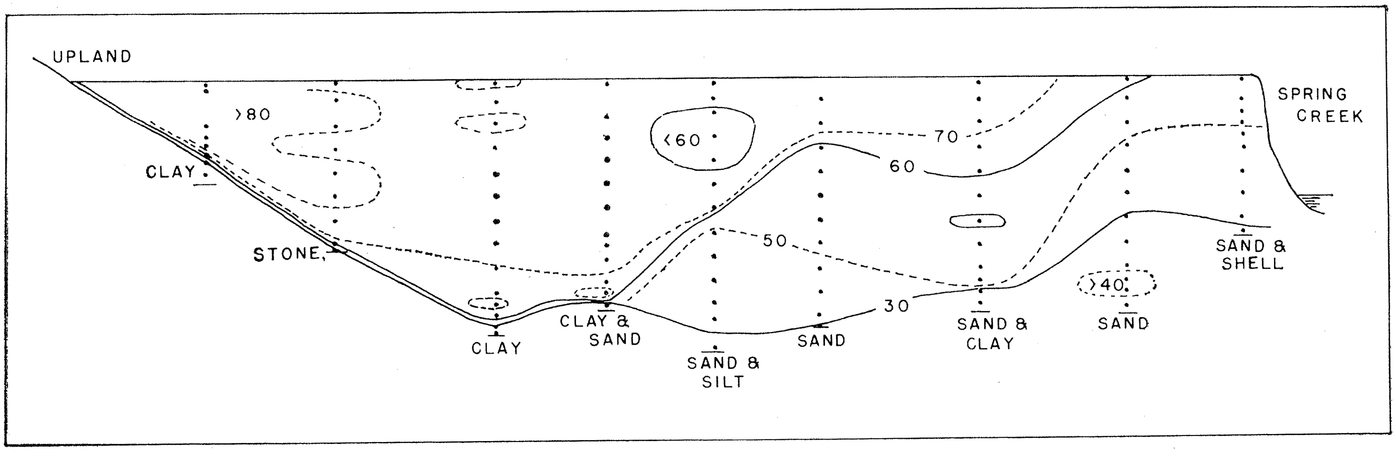

Fig. 5. Water content of peat in a section of marsh from upland to a tidal creek.

beginning is evident at the earlier stage. They occupy positions where, presumably, sand flats had built up. Growth appears to have resulted from the establishment on these flats of islands of intertidal marsh which subsequently become continuous, a process which can be seen to be taking place in the presently existing intertidal islands. The development of these tongues resulted in the separation of the open water into broad sounds which narrowed progressively to define the position of the present major creek systems.

A comparison of Fig. 3, *C–E*, suggests that these sounds narrowed by the spreading of intertidal marsh onto sand flats on which a meandering channel system was already developed. The marsh peat may be expected to have stabilized the meander pattern, which has remained with little alteration, as the peat has built up to the present high marsh level. Confirmation of this supposition is found in relatively young marshes at Provincetown and Wellfleet, Massachusetts, where the creeks at low tide meander between bare sand banks along a "thalweg" formed by relatively straight banks of peat.

At present, high marsh extends to the banks of the present creeks, except in limited local areas. Goldthwait has commented on the stability of the meander patterns of tidal creeks (*11*). A quasi-equilibrium determined by hydraulic forces appears to have been reached between the processes of accretion and erosion. Leopold and Langbein (*12*) and Langbein (*13*) have shown that in a tidal estuary the width, depth, and velocity of flow vary with a power of the mean discharge, *Q*, such that

$$\begin{array}{ll} \text{Width} & \propto Q^{b} \\ \text{Mean depth} & \propto Q^{f} \\ \text{Mean velocity} & \propto Q^{m} \end{array}$$

From considerations which include continuity, theoretical relations between velocity, slope, and depth, and the conditions that at equilibrium the total work done in the system be minimal and that energy be dissipated uniformly along the channel, they have deduced theoretical relations between the exponents, *b*, *f*, and *m*, which are shown in Table 1. These values, which define the hydraulic geometry of a tidal stream, agree closely with those obtained by measurements in two tidal estuaries near Alexandria, Virginia. Measurements along Spring Creek, in the Barnstable marsh, yield values which agree equally well with theory.

The reconstructions provide a picture of the ontogeny of the Barnstable marsh which is orderly and plausible. They indicate that the sand spit has grown eastward during a period of about 4000 years. The marsh, which consisted at first of isolated pockets in protected indentations of the upland, became continuous and began to spread into the enclosure from along the upland margin as sediment accumulated in its shallower parts and protection from the sea became more complete. The development of marsh along the margin of the sand spit proceeded more slowly, perhaps because the basin deepened with distance from the upland and more time was required for sedimentation to reduce its depth. The broad sounds between the advancing tongues of marshland became the site of the future creeks, and the meandering channels in the sand which formed their bottom defined the final pattern which these creeks assumed. High marsh has now extended to the margin of these channels and at present the creeks are in quasi-equilibrium with the hydraulic forces which arise from the quantity of water which they must carry in response to the rhythm of the tide.

ALFRED C. REDFIELD
Woods Hole Oceanographic Institution, Woods Hole, Massachusetts

References and Notes

1. N. S. Shaler, *U.S. Geol. Surv. 6th Ann. Rept.*, p. 364 (1886).
2. V. J. Chapman, *Salt Marshes and Salt Deserts of the World* (Interscience, New York, 1960).
3. A. C. Redfield, in *Proceedings of the Salt Marsh Conference 1958* (Marine Institute, University of Georgia, Athens, 1959), pp. 37–39.
4. B. F. Mudge, *Proc. Essex Inst.* **2**, 117 (1858).
5. D. W. Johnson, *The New England-Acadian Shoreline* (Wiley, New York, 1925).
6. J. C. Ayers, *Limnol. Oceanogr.* **4**, 448 (1959).
7. J. B. Woodworth and E. Wigglesworth, *Mem. Mus. Comp. Zool. Harvard* **52**, 1 (1934).
8. A. C. Redfield and M. Rubin, *Proc. Natl. Acad. Sci. U.S.* **48**, 1728 (1962).
9. K. F. Mather, R. P. Goldthwait, L. R. Thiesmeyer, *Bull. Geol. Soc. Amer.* **53**, 1127 (1942).
10. M. Rubin and C. Alexander, *Am. J. Sci. Radiocarbon Suppl.* **2**, 129 (1960).
11. J. W. Goldthwait, *Proc. Geol. Soc. Am.* (for 1936) **73**, 1 (1937).
12. L. B. Leopold and W. B. Langbein, *U.S. Geol. Surv. Profess. Papers* **422-B** (1963).
13. W. B. Langbein, *Bull. Int. Assoc. Sci. Hydrol.* **8**, 84 (1963).
14. This paper was presented at a Conference on Estuaries held at Jekyll Island, Georgia, 31 March–4 April 1964 and will be published as a monograph by the AAAS. The work was supported by the Associates of the Woods Hole Oceanographic Institution and the National Science Foundation (contract GP2042). The assistance of John S. Cobb, E. W. E. Doe, Lincoln Hollister, and Thomas Newbury is gratefully acknowledged.

5 November 1964

Acid Phosphatase-Rich Granules in Human Lymphocytes Induced by Phytohemagglutinin

Abstract. *Human lymphocytes, cultured in the presence of phytohemagglutinin, undergo morphologic transformation and subsequent mitosis. Before mitosis (48 to 72 hours), a sharp increase in acid phosphatase activity occurs in cells stimulated with phytohemagglutinin. Histochemical examination of these cells demonstrates that innumerable granules containing acid phosphatase develop in the cytoplasm before mitosis. It is possible that enzymes present in granules which stain for acid phosphatase activity (lysosome-like) may play a role in phytohemagglutinin-stimulated cell division.*

Human lymphocytes, obtained from either peripheral blood or thoracic duct lymph, can be cultured in vitro. When phytohemagglutinin (PHA), an extract from the kidney bean *Phaseolus vulgaris*, is added to the cultures, such cells clump and promptly begin the synthesis of RNA (*1*) and protein, a variable proportion of which is gamma globulin (*2*). After approximately 36 hours in culture, these lymphocytes begin to synthesize DNA (*1*); after 48 to 72 hours in culture they undergo mitosis (*3*). However, before cell division, 80 to 95 percent of the cells have already enlarged (*2*), becoming basophilic and pyroninophilic (*4*). Since a perinuclear clear zone (Golgi apparatus?) and acidophilic granules were observed in over 50 percent of these cells by means of conventional staining procedures and phase contrast microscopy, it appeared possible that new lysosome-like structures might have been formed. Novikoff (*5*) had previously suggested that lysosomes, organelles containing acid hydrolases such as acid phosphatase, may take their origin from the small vesicular bodies of the Golgi apparatus.

Cultures of lymphocytes, some of which were stimulated with PHA, were grown as previously described (*6*), but the lymphocytes were harvested before the addition of a mitotic arresting agent and were resuspended in calf serum, smeared on glass slides, and dried by air. They were stained for acid phosphatase by a modification of the Gomori method (*7*), incubation times of 4 to 8 hours being used. Over 90 percent of the cells from stimulated cultures (including all the cells within aggregates) showed abundant cytoplasmic granules containing acid phosphatase (Fig. 1*A*).